| General specifications | |
|---|---|
| Spa weight (dry) | 246 kg |
| Spa weight (filled) | 1181 kg |

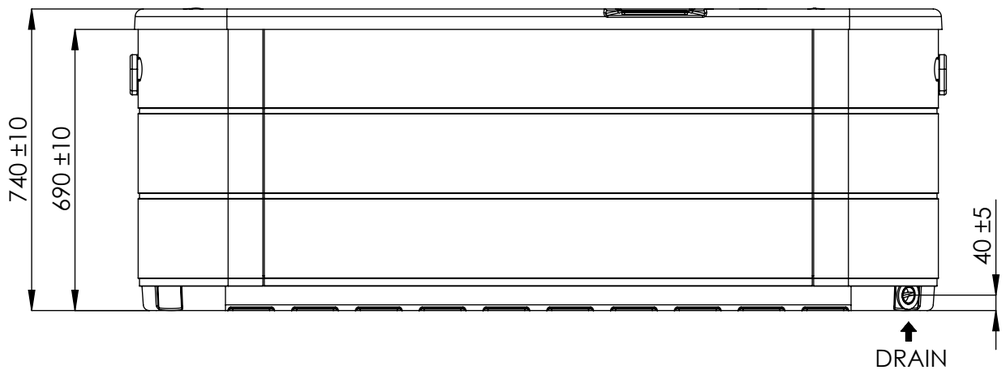


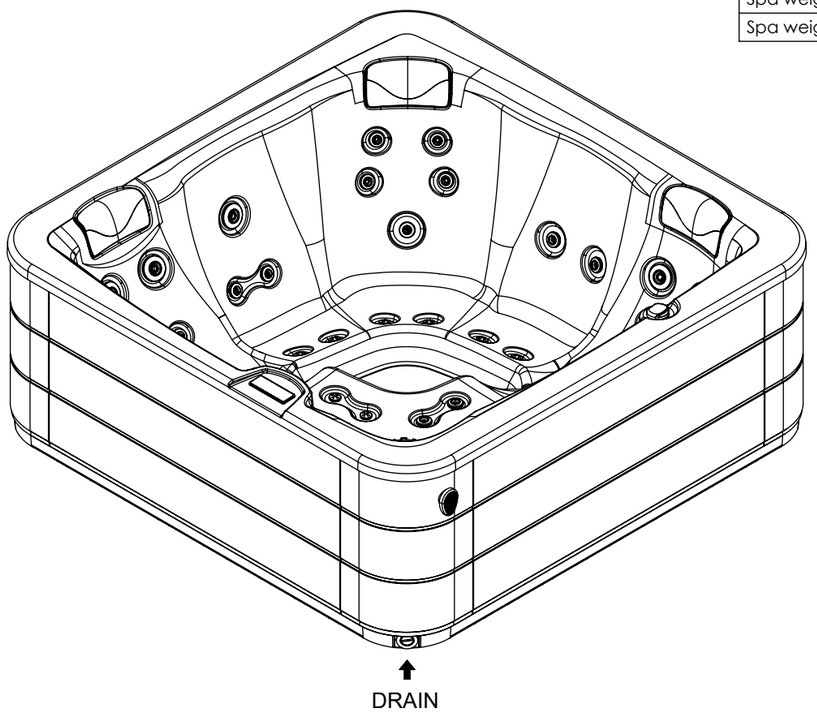


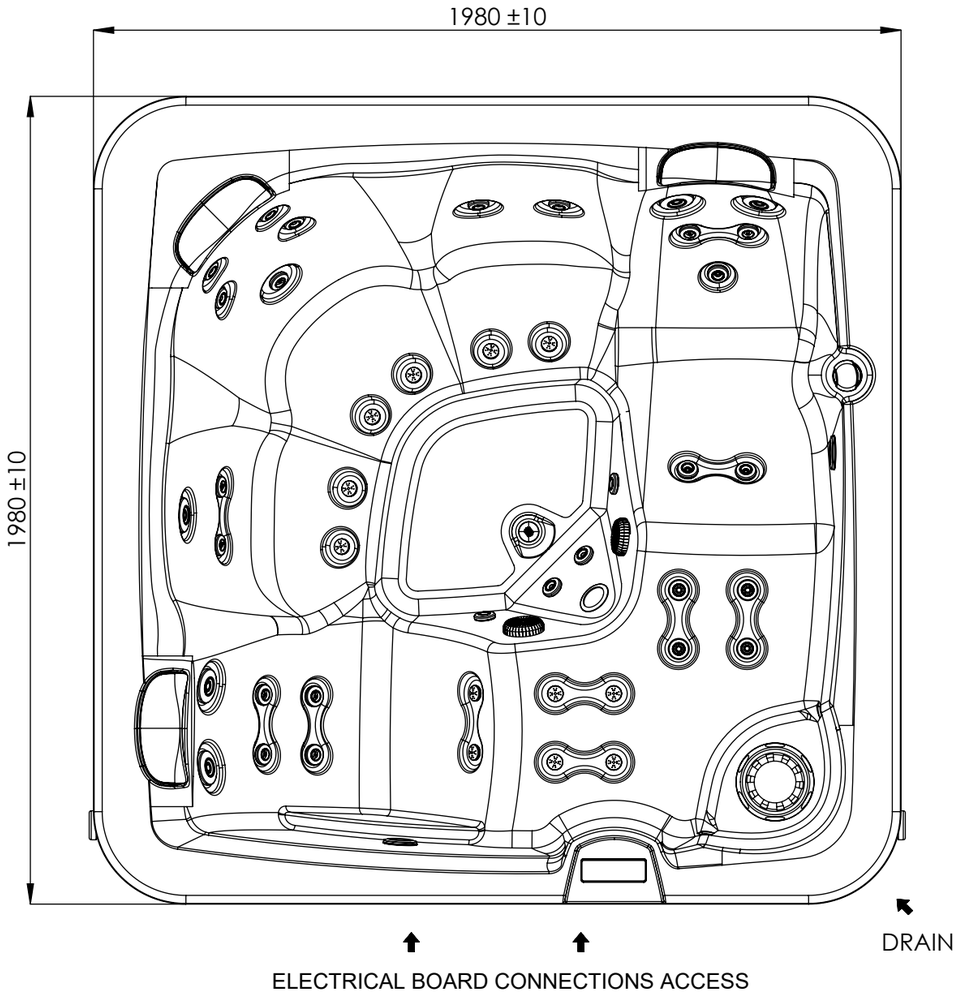


**WARNING:**
It's essential to keep a minimum clearance access of **700mm** all around.

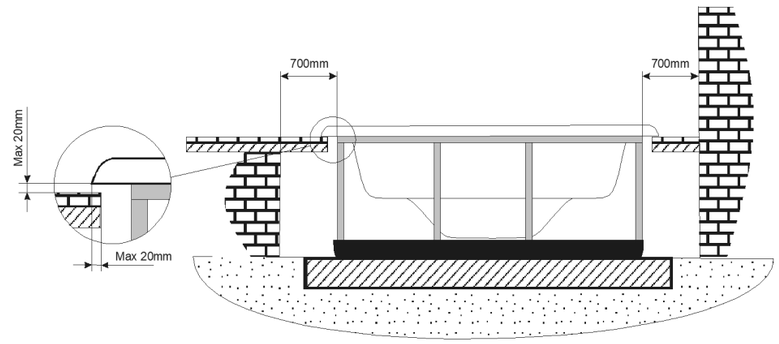


*According to our policy of continuous improvement, dimensions, features or components of this product can be partially or completely changedwithout prior notice.*
*It's Customer responsibility to verify that this is the last version of the drawing.*

| Revision *Revisión* | Date *Fecha* | Name *Nombre* | Modification *Modificación* |
|---|---|---|---|
| | | | |
| | | | |
| | | | |
| | | | |
| 01 | 28/03/2025 | Paula S. | afegim àudio 2.0 i taula de pesos |

Dimensions in mm. General Tolerances +/- 10mm

**COMMERCIAL**

| | Date | Name |
|---|---|---|
| Drawn | 12/11/2020 | A. Miquel |
| Checked | 28/03/2025 | Bernat S. |
| Scale 1:15 | General Tolerance DIN 7168 ISO 2768g | |
| Sheet 1/1 | | |

ASTRALPOOL

Code 74134

Rev. 01

Size A3

First Angle Projection

Property of IBERSPA S.L. Avda. Plà d'Urgell 2-8 25200 Cervera, Spain. Don't use without permission. Keep this information confidential and use it solely for the permitted purpose.